TEST CASE 3: Loaded Horn Antenna
Monostatic and Bistatic RCS Simulations

Chairs: Andrej Konforta, Fraunhofer FHR (andrej.konforta@fhr.fraunhofer.de)
Johannes Bökler, Fraunhofer FHR (johannes.boekler@fhr.fraunhofer.de)

1. Definition of the Geometry

The target is a horn antenna terminated in various loads. The aperture centroid is assumed to be located at (x,y,z) = (0,0,0). CAD models for both the antenna and the loads are also available and can be obtained by email from the chair.

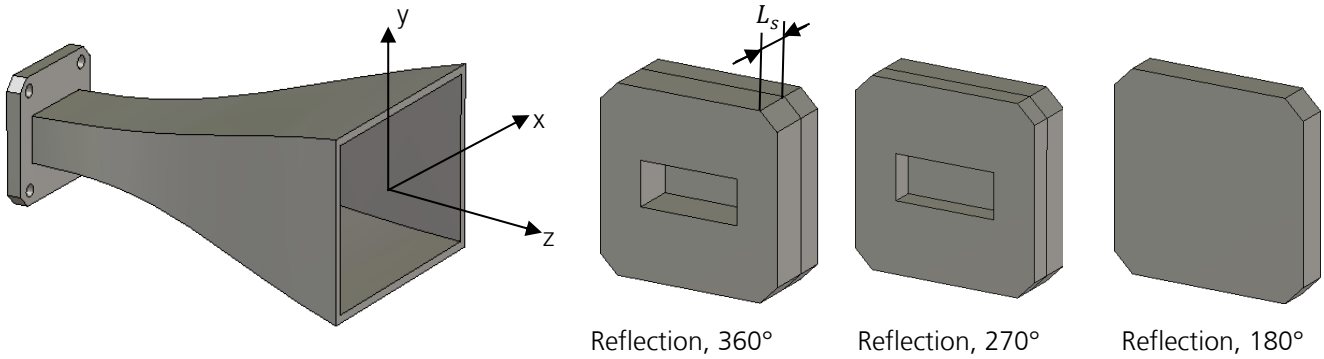

2. Simulation Parameters

The time dependency is assumed to be $e^{j\omega t}$. All parts are assumed to be made of perfectly electric conducting material (PEC).

3.

Given the coordinate system of the CAD model (see above) and the usual definition of angles:

- Elevation angle Theta, θ: starting from the positive +z axis,
- Azimuth angle Phi, ϕ: starting from the positive +x axis,

the following sub-cases are proposed.

1. **Case (a): Open**

The co- and cross-polar monostatic RCS for both polarizations is required in an angular sweep that starts from the aperture normal and ends at a 45° degree along the ϑ direcetion for ϕ=0° and ϕ =90°, respectively. This needs to be obtained for a certain number of equally spaced frequency points.

- Frequency: f = [8.2 GHz, 12.2 GHz], Δf = 50 MHz
- Angular Sweep: $\theta = [0°, 45°]$, , ϕ = [0°,90°], $\Delta\theta = 0.5°, \Delta\phi = 90°$
- Polarizations: full response, i.e. Theta-Theta Theta-Phi, Phi-Theta and Phi-Phi

1. Case (b): Terminated

As (a), but the antenna is terminated by a matched waveguide load, e.g., an absorbing waveguide port having a field configuration corresponding to the TE_{10}- Mode.

2. **Case (c1): Short, 180° @10 GHz, mono-static**

As (a), but the antenna is terminated by a PEC plate seamlessly attached (L_S = 0 mm) to its WR-90 terminal.

3. **Case (c2): Short, 270° @10 GHz, mono-static**

As (c1), but $L_s = 4.96\ mm$

4. **Case (c3): Short, 360° @10 GHz, mono-static**

   As (c1), but $L_s = 9.93\ mm$

5. **Case (c4): Short, 180° @10 GHz, bi-static**

   This sub-case requires co- and cross-polar bistatic RCS for both polarizations. The aperture is always illuminated from normal incidence ($\theta = 0°$) and then, an angular sweep that starts from the positive z-axis is demanded for the reception along θ for $\phi = 0°$ and $\phi = 90°$, respectively. This needs to be obtained for a certain number of equally spaced frequency points.

   - Frequency: f = [8.2 GHz, 10.4 GHz], Δf = 50 MHz
   - Angular Sweep:
     - a. Illumination: θ = 0º, ϕ = 0º.
     - b. Reception: θ = [0º,+45°], ϕ = [0º, 90º],$\Delta\theta$ = 0.5º, $\Delta\phi$ = 90º
   - Polarizations: full response, i.e. Theta-Theta Theta-Phi, Phi-Theta and Phi-Phi

4. Data Formats

The results will be stored in ASCII files, labelled as:

- test_case_Xa_phi_0_CONTRIBUTOR_NAME.txt
- test_case_Xa_phi_90_CONTRIBUTOR_NAME.txt
- test_case_Xb_phi_0_CONTRIBUTOR_NAME.txt
- test_case_Xb_phi_90_CONTRIBUTOR_NAME.txt
- test_case_Xc1_phi_0_CONTRIBUTOR_NAME.txt
- test_case_Xc1_phi_90_CONTRIBUTOR_NAME.txt
- test_case_Xc2_phi_0_CONTRIBUTOR_NAME.txt
- test_case_Xc2_phi_90_CONTRIBUTOR_NAME.txt
- test_case_Xc3_ phi_0_CONTRIBUTOR_NAME.txt
- test_case_Xc3_ phi_90_CONTRIBUTOR_NAME.txt
- test_case_Xc4_ phi_0_CONTRIBUTOR_NAME.txt
- test_case_Xc4_ phi_90_CONTRIBUTOR_NAME.txt

where “CONTRIBUTOR_NAME” should be replaced by the name of the contributing institution, if necessary followed by a postfix indicating the method used for the simulations, e.g., Contributor1_FDTD, Contributor1_MoM,...
Each file will contain on each row the data :

θ f Re(Eθθ) Im(Eθθ) Re(Eθϕ) Im(Eθϕ) Re(Eϕθ) Im(Eϕθ) Re(Eϕϕ) Im(Eϕϕ)

where θ is the angle in degrees, f is the frequency in GHz, Eθθ, Eθϕ, Eϕϕ and Eθϕ are the complex scattered fields in V/m. Eθθ and Eϕϕ shall be
normalized according to σθθ/ϕϕ = 20*log10(4π abs(Eθθ/ϕϕ)), where σ is the RCS in dBsm.

5. Additional Information

Each .txt-file should be accompanied by a .info-file, stating additional information relevant for the simulation, e.g., short description of the method used, CPU time, memory usage, number of unknowns, characteristics of simulation hardware (number of cores, processor speed),...